版本：V2.3

*開關產品未經SWITRONIC同意，請勿拆解，否則無法負品質及安全責任。
Please do not decompose the switch without any permission from SWITRONIC, otherwise the quality and safety responsibility could not be guaranteed.

*本圖面若與目錄之規格尺寸不符，以本圖面規格尺寸為主。
Below is our main specification if different from catalog.

RoHS compliant

CIRCUIT DIAGRAM

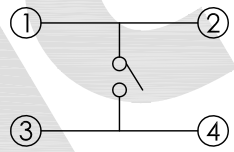

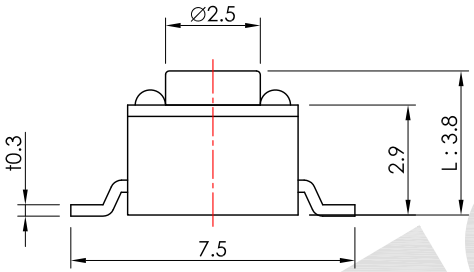

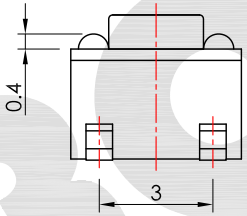

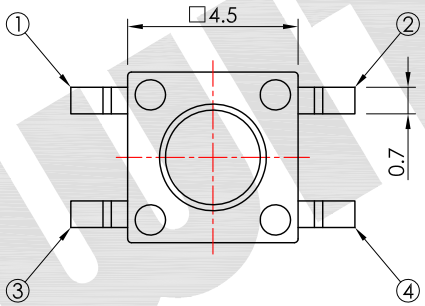

P.C.B. LAYOUT

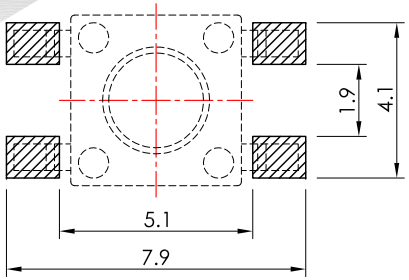

RoHS compliant

IT-1109SX-XXXG-G

MODEL NO.	L
□	3.8
A	7.0
B	4.8
D	5.0

OPERATING FORCE
100 , 160 , 250

SWITRONIC 一綺 JUL. 28, 2017 ISSUED ENGINEERING DEPT

SPECIFICATION

Rating: 50mA 12V DC.
Function: OFF-(ON).
Travel: 0.25±0.1mm.
Contact resistance: 100mΩ Max.(initial)
Operating force: 160±50g.
Minimum load: 10mA 12V DC.
Life: 100,000 Cycles.
Soldering temperature: 250°C Max. for 3 sec.
Soldering time: 1 time only.
Packing for reel: 2,000 pcs / reel.
Note1: Unwashable, don't be immerged by epoxy and organic solvent.
Note2: Please check the actual size, do not scale the drawing page.

STORAGE METHOD

After opening the bag of the switches, please include a desiccant into the bag, then seal it to avoid product oxidation.
打開包裝袋後，請在袋中加入乾燥劑並「密封」，避免產品氧化。

版本 VER.	符號 SYMBOL	修改內容 ALTERATION	更新日期 DATE
EV2.2	無	改 版	2017.07.28
EV2.1	無	改 版	2016.06.30
EV2.0	無	新繪製	2015.09.17

產品 PRODUCT	Tact Switch		型號 MODEL NO.	IT-1109S-160G-G
製圖 DRAWN BY	核圖 CHECKED BY	主管 APPROVED BY	單位 UNIT	mm
Delon Lin	Chuck Young	Margaret Lee	比例 SCALE	5 : 1
			公差 TOLERANCE	.X=±0.3mm, .XX=±0.2mm

SWITRONIC® INDUSTRIAL CORP. Switches

一綺電子企業股份有限公司
總公司：110 台北市信義路四段415號13樓之3
13F-3, NO.415, SEC.4, HSIN YI ROAD, TAIPEI, TAIWAN
TEL : 886-2-27290229(Rep.) FAX : 886-2-27582086
URL : www.switronic.com E-MAIL : switches@ms36.hinet.net

SWITRONIC

一綺電子企業股份有限公司
SWITRONIC INDUSTRIAL CORP.

Model No.: IT-1109S SERIES EV2.0 Date : 2016/06/30

1. General

1.1 Application This specification is applied to TACT switches which have no keytop.

1.2 Operating temperature range
: -20 ~ 70 ℃ (normal humidity, normal air pressure)

1.3 Storage temperature range
: -30 ~ 80 ℃ (normal humidity, normal air pressure)

1.4 Test conditions Unless otherwise specified, the atmospheric conditions for marking measurements and tests are as follows.
Normal temperature : (Temperature 5 ~ 35 ℃)
Normal humidity : (Relative humidity 25 ~ 85 %)
Normal air pressure : (Air pressure 86 ~ 106 kPa)
If any doubt arise from judgement, tests shall be conducted at the following conditions.
Ambient temperature : 20 ± 2 ℃
Relative humidity : 60 ~ 70 %
Air pressure : 86 ~ 106 kPa

2. Appearance, style and dimensions

2.1 Appearance There shall be no defects that affect the serviceability of the product.

2.2 Style & dimensions Refer to the assembly drawings.

3. Type of actuating Tactile feedback

4. Contact arrangement 1 pole 1 throw

(Details of contact arrangement are given in the assembly drawings)

5. Rating

5.1 Maximum ratings 12 V DC 50 mA

5.2 Minimum ratings 12 V DC 10 mA

6. Electrical specification

	Items	Test conditions	Criteria
6.1	Contact resistance	Applying a blow static load to the center of the stem, measurements shall be made. (1) Depression : 520 gf (5.096 N) (2) Measuring method: 1 kHz small-current contact resistance meter or voltage drop method at 5V DC 10mA.	100 mΩ Max.
6.2	Insulation resistance	Measurements shall be made following the test set forth below : (1) Test voltage : 100 V DC for 1 min (2) Applied position : Between all terminals. And if there is a metal frame, between terminals and ground(frame).	100 MΩ Min.
6.3	Voltage proof	Measurements shall be made following the test set forth below : (1) Test voltage : 100 V AC (50 ~ 60 Hz) (2) Duration : 1 min (3) Applied position : Between all terminals. And if there is a metal frame, between terminals and ground(frame).	There shall be no breakdown.

SWITRONIC 一綺 JUN. 30, 2016 ISSUED ENGINEERING DEPT

	Items	Test conditions	Criteria
6.4	Bounce	Lightly striking the center of the stem at a rate encountered in normal use (3 to 4 operations per sec.) bounce shall be tested at "ON" and "OFF". 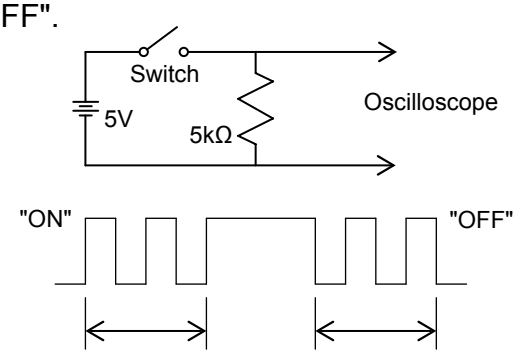	ON bounce : 10 ms Max. OFF bounce : 10 ms Max.

7. Mechanical specification

	Items	Test conditions	Criteria
7.1	Operating force	Placing the switch such that the direction of switch operation is vertical and then gradually increasing the load applied to the center of the stem, the maximum load required for the switch to come to a stop shall be measured.	160 ± 50 g
7.2	Travel	Placing the switch such that the direction of switch operation is vertical and then applying static load to the center of the stem, the travel distance for the switch to come to a mask "ON" shall be measured.	0.25 ± 0.1 mm
7.3	Return force	The sample switch is installed such that the direction of switch operation is vertical and, upon depression of the stem in its center the travel distance, the force of the stem to return to its free position shall be measured.	40 gf Min. (0.39 N Min.)
7.4	Stop strength	Placing the switch such that the direction of switch operation is vertical and then a below static load shall be applied in the direction of stem operation. (1) Depression : 1 Kg (2) Duration : 3 s	There shall be no sign of damage mechanically and electrically.

8. Environmental specification

	Items	Test conditions	Criteria
8.1	Resistance to low temperatures	Following the test set forth below the sample shall be left in normal temp' and humidity conditions for 1 hour before measurements are made : (1) Temperature : -30 ± 2 ℃ (2) Time : 96 h (3) Water drops shall be removed.	Item 6. Item 7.1 Item 7.2

SWITRONIC 一綺 JUN. 30, 2016 ISSUED ENGINEERING DEPT

	Items	Test conditions	Criteria
8.2	Heat resistance	Following the test set forth below the sample shall be Left in normal temperature and humidity conditions for 1 hour before measurements are made : (1) Temperature : 80 ± 2 ℃ (2) Time : 96 h	Item 6. Item 7.1 Item 7.2
8.3	Moisture resistance	Following the test set forth below the sample shall be left in normal temperature and humidity condition for 1 hour before measurements are made: (1) Temperature : 60 ± 2 ℃ (2) Time : 96 h (3) Relative humidity : 90 ~ 95 % (4) Water drops shall be removed.	Contact resistance (Item 6.1) : 200 mΩ Max. Insulation resistance (Item 6.2) : 10 MΩ Min. Bounce (Item 6.4) : ON bounce 20 ms Max. : OFF bounce 20 ms Max. Item 6.3, 7.2, 7.1
8.4	Change of temperature	After the test by following conditions, the switch shall be allowed to stand under normal room temperature and humidity conditions for 1 hour, and measurement shall be made. Water drops shall be removed. (1) Times of cycles : 5 times 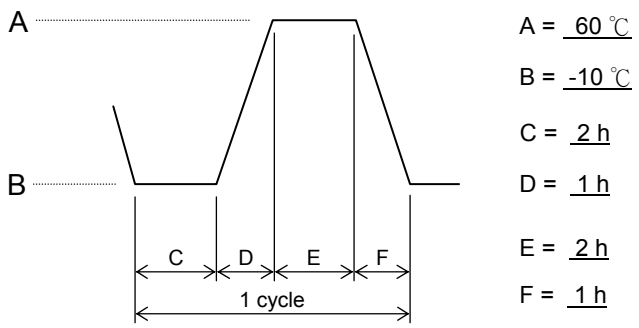 	Item 6. Item 7.1 Item 7.2

9. Endurance specification

	Items	Test conditions	Criteria
9.1	Operating life	Measurements shall be made following the test set forth below : (1) 12 V DC 50 mA resistive load. (2) Rate of operation : 2 to 3 operations per sec. (3) Depression : The maximum load of a specification of the operating force. (4) Cycles of operation : 100,000 cycles.	Contact resistance (Item 6.1) : 200 mΩ Max. Insulation resistance (Item 6.2) : 10 MΩ Min. Bounce (Item 6.4) : ON bounce 20 ms Max. : OFF bounce 20 ms Max. Operating force (Item7.1) : ±30 % of initial force Item 6.3, 7.2

SWITRONIC 一綺 JUN. 30, 2016 ISSUED ENGINEERING DEPT

	Items	Test conditions	Criteria
9.2	Vibration resistance	Measurements shall be made following the test set forth below : (1) Vibration frequency range : 10 ~ 55 Hz (2) Total amplitude : 1.5 mm (3) Sweep ration : 10-55-10 Hz Approx. 1 min (4) Method of changing the sweep vibration frequency : Logarithmic or uniform (5) Duration : 2 h each	Item 6. Item 7.1 Item 7.2
9.3	Shock	Measurements shall be made following the test set forth below: (1) Acceleration : 784 m/s^2 (2) Test direction : 6 directions (3) Number of shocks : 3 times per direction (18 times in total) 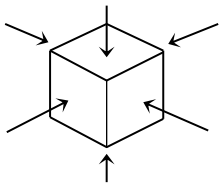	Item 6. Item 7.1 Item 7.2

10. Soldering conditions

	Items	Recommended conditions
10.1	Hand soldering	Please practice according to below conditions. (1) Soldering temperature : 350 ℃ Max. (2) Continuous soldering time : 3 seconds Max. (3) Excessive pressure shall not be applied to the terminal.
10.2	Reflow soldering	Please practice according to below conditions. (1) Preheat : Temperature on the copper foil surface should reach 180 ℃, 2 ± 0.3 minutes after the PCB entered into the soldering equipment. (2) Soldering heat : Temperature on the copper foil surface should reach the peak temperature of 250 ℃ within 30 seconds after the PCB entered into soldering heat zone. (3) Soldering time : 1 time only. 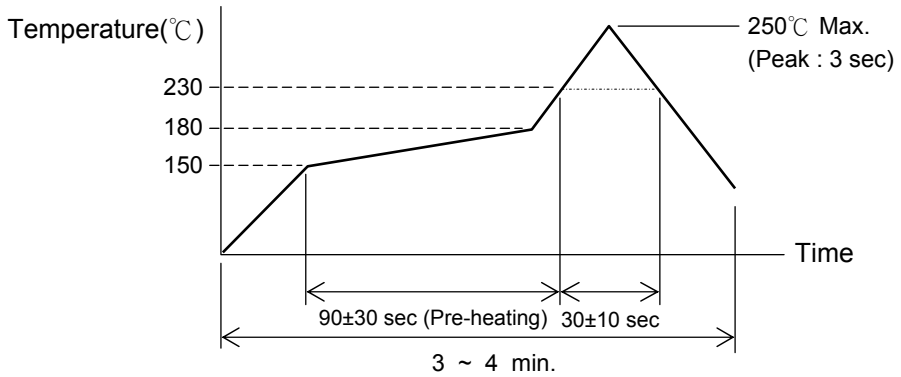 Time inside soldering equipment

SWITRONIC 一綺 JUN. 30, 2016 ISSUED ENGINEERING DEPT

一綺電子企業股份有限公司
SWITRONIC INDUSTRIAL CORP.

入料包裝方式
Packing for Products

☐ 管裝方式
Packing for tube

成品
Products

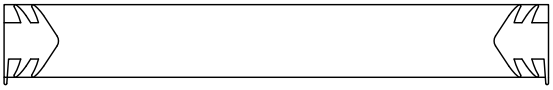

透明管包裝
Packing for tube

Packing for tube： _____ pcs / tube.

■ 捲裝方式
Packing for reel

成品
Products

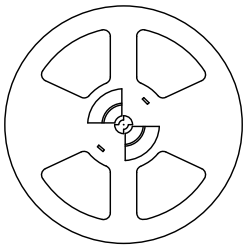

捲軸包裝
Packing for reel

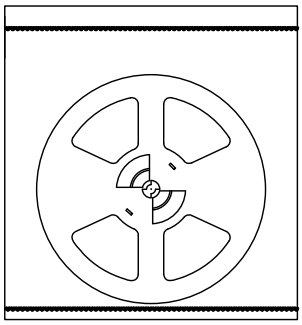

PE袋熱封
Sealed for PE-bag

Packing for reel： 2,000 pcs / reel， 1 reel / polybag.

Quantity thickness for polybag： 0.08 mm，Quantity desiccating agent： 1 pcs.

一綺電子企業股份有限公司
SWITRONIC INDUSTRIAL CORP.

產品綠色環保標章
"G" Mark for All RoHS Compliant Products

環保標章式樣
Initial "G": Standing for Green Label

外箱標示
Marked on The Outside of Carton As: